Work Order ID 65727

Monday, January 24, 2011 1:37:22 PM

Item ID: D2724-042 **Accept** **Setup Start**

Revision ID: **Stop**

Item Name: 206L Step Assembly

Start Date: 1/24/2011 **Start Qty:** 2.00 **Cust Item ID:**

Required Date: 2/7/2011 **Req'd Qty:** 2.00 **Customer:**

Reference:

Approvals: **Process Plan:** _____ **Date:** 1-01-24 **Tooling:** _____ **Date:** _____ **Run Start**

QC: _____ **Date:** _____ **SPC (Y/N):** _____ **Date:** _____ **Stop**

Sequence ID/ Work Center ID	Operation Description	Set Up/ Run Hours	Tool ID	Tool #	Plan Code	Accept Qty	Reject Qty	Reject Number	Insp. Stamp
Draw Nbr	**Revision Nbr**								
D2724	Rev C								
100		0.00							
Large Fab	Large Fab								
Large Fab	**Memo**	0.00				2	0		
Large Fab	Cut D2724-2 using D2622 extrusion as per Dwg D2724 Deburr and bevel ends for welding								
110		0.00							
Large Fab	Large Fab								
Large Fab	**Memo**	0.00				2	0		
Large Fab	Weld end cap (One End Only) and lugs as per Dwg D2724 using Jig DT8898 followed by Jig A/R AL ROD Batch: M108436 M115928 Grind end cap welds flush								

Dart Aerospace Ltd

W/O:		WORK ORDER CHANGES					
DATE	STEP	PROCEDURE CHANGE	By	Date	Qty	Approval Chief Eng / Prod Mgr	Approval QC Inspector

Part No: _____ **PAR #:** _____ **Fault Category:** _____ **NCR:** Yes No **DQA:** _____ **Date:** _____

Resolution: _____ **Disposition:** _____ **QA: N/C Closed:** _____ **Date:** _____

NCR:		WORK ORDER NON-CONFORMANCE (NCR)						
DATE	STEP	Description of NC Section A	Corrective Action Section B			Verification Section C	Approval Chief Eng	Approval QC Inspector
			Initial Chief Eng	Action Description Chief Eng	Sign & Date			

NOTE: Date & initial all entries

H:\fFORMS\Quality Assurance\approved QA\NCRWO RevE

Work Order ID 65727

Monday, January 24, 2011 1:37:22 PM

Item ID: D2724-042 **Accept** **Setup Start**

Revision ID: **Stop**

Item Name: 206L Step Assembly

Start Date: 1/24/2011 **Start Qty:** 2.00 **Cust Item ID:**

Required Date: 2/7/2011 **Req'd Qty:** 2.00 **Customer:**

Reference:

Approvals: **Process Plan:** _____ **Date:** _____ **Tooling:** _____ **Date:** _____ **Run Start**

QC: _____ **Date:** _____ **SPC (Y/N):** _____ **Date:** _____ **Stop**

Sequence ID/ Work Center ID	Operation Description	Set Up/ Run Hours	Tool ID	Tool #	Plan Code	Accept Qty	Reject Qty	Reject Number	Insp. Stamp
120	QC9- Inspect visual per QSI004- Fusion Welds	0.00				2	Ø	BE	11/02/23
QC Quality Control	Memo	0.00							
130	QC5- Inspect part completeness to step on W/O	0.00				+2			
QC Quality Control	Memo	0.00	S 11/02/24			RM			
140	Chemical Conversion Coat per QSI005 4.1	0.00							
HandFinish Hand Finishing	Memo	0.00				XZRH	Ø	M	11/02/24

Dart Aerospace Ltd

W/O:		WORK ORDER CHANGES					
DATE	STEP	PROCEDURE CHANGE	By	Date	Qty	Approval Chief Eng / Prod Mgr	Approval QC Inspector

Part No: _____ **PAR #:** _____ **Fault Category:** _____ **NCR:** Yes No **DQA:** _____ **Date:** _____

Resolution: _____ **Disposition:** _____ **QA: N/C Closed:** _____ **Date:** _____

NCR:		WORK ORDER NON-CONFORMANCE (NCR)						
DATE	STEP	Description of NC Section A	Corrective Action Section B			Verification Section C	Approval Chief Eng	Approval QC Inspector
			Initial Chief Eng	Action Description Chief Eng	Sign & Date			

NOTE: Date & initial all entries

H:\fFORMS\Quality Assurance\approved QA\NCRWO RevE

Work Order ID 65727

Monday, January 24, 2011 1:37:22 PM

Item ID: D2724-042 **Accept** **Setup Start**

Revision ID:

Item Name: 206L Step Assembly **Stop**

Start Date: 1/24/2011 **Start Qty:** 2.00 **Cust Item ID:**

Required Date: 2/7/2011 **Req'd Qty:** 2.00 **Customer:**

Reference:

Approvals: **Process Plan:** _____ **Date:** _____ **Tooling:** _____ **Date:** _____ **Run Start**

QC: _____ **Date:** _____ **SPC (Y/N):** _____ **Date:** _____ **Stop**

Sequence ID/ Work Center ID	Operation Description	Set Up/ Run Hours	Tool ID	Tool #	Plan Code	Accept Qty	Reject Qty	Reject Number	Insp. Stamp
150	QC3- Inspect Part Finish	0.00							
QC	**Memo**	0.00	11·02·26			2	ø		
Quality Control									
160		0.00							
Large Fab	Large Fab								
Large Fab	**Memo**	0.00				2	ø		
	Inspect for foreign object per QSI 024		11·02·26						
	Weld Remainig end cap as per Dwg D2724 A/R AL ROD Batch: M108436								
	Grind end plate flush.								
170	~~QC9~~ QC10- Inspect visual per QSI004- Fusion Welds	0.00							
QC	**Memo**	0.00	5 1/02/26			72			
Quality Control									

Dart Aerospace Ltd

W/O:		WORK ORDER CHANGES					
DATE	STEP	Perm. Dwg PROCEDURE CHANGE	By	Date	Qty	Approval Chief Eng / Prod Mgr	Approval QC Inspector
11/02/26	#170	change step to QC10 inspection					S 11/02/26

Part No: _____ **PAR #:** _____ **Fault Category:** _____ **NCR:** Yes No **DQA:** _____ **Date:** _____

Resolution: _____ **Disposition:** _____ **QA: N/C Closed:** _____ **Date:** _____

NCR:		WORK ORDER NON-CONFORMANCE (NCR)						
DATE	STEP	Description of NC Section A	Corrective Action Section B			Verification Section C	Approval Chief Eng	Approval QC Inspector
			Initial Chief Eng	Action Description Chief Eng	Sign & Date			

NOTE: Date & initial all entries

H:\fFORMS\Quality Assurance\approved QA\NCRWO RevE

Work Order ID 65727

Monday, January 24, 2011 1:37:22 PM

Item ID: D2724-042 **Accept** **Setup Start**

Revision ID: **Stop**

Item Name: 206L Step Assembly

Start Date: 1/24/2011 **Start Qty:** 2.00 **Cust Item ID:**

Required Date: 2/7/2011 **Req'd Qty:** 2.00 **Customer:**

Reference:

Approvals: **Process Plan:** _____ **Date:** _____ **Tooling:** _____ **Date:** _____ **Run Start**

QC: _____ **Date:** _____ **SPC (Y/N):** _____ **Date:** _____ **Stop**

Sequence ID/ Work Center ID	Operation Description	Set Up/ Run Hours	Tool ID	Tool #	Plan Code	Accept Qty	Reject Qty	Reject Number	Insp. Stamp
180	QC5- Inspect part completeness to step on W/O	0.00							
QC	Memo	0.00				+2 RM			
Quality Control									
190	Chemical Conversion Coat per QSI005 4.1	0.00							
HandFinish	Memo	0.00							
Hand Finishing									
200	White Gloss(Ref:4.3.5.1) per QSI005 4.3-Alum	0.00							
Powdercoat	Memo	0.00							
Powder Coating									

8 11/02/28

(2X)

7 M.R. 11/02/28

MU5951

START TIME: 1:00

OVEN TEMPERATURE: 320°

FINISH TIME: 1:30.

2 BL 11-2-28.

Dart Aerospace Ltd

W/O:		WORK ORDER CHANGES					
DATE	STEP	PROCEDURE CHANGE	By	Date	Qty	Approval Chief Eng / Prod Mgr	Approval QC Inspector

Part No: _____ **PAR #:** _____ **Fault Category:** _____ **NCR:** Yes No **DQA:** _____ **Date:** _____

Resolution: _____ **Disposition:** _____ **QA: N/C Closed:** _____ **Date:** _____

NCR:		WORK ORDER NON-CONFORMANCE (NCR)						
DATE	STEP	Description of NC Section A	Corrective Action Section B			Verification Section C	Approval Chief Eng	Approval QC Inspector
			Initial Chief Eng	Action Description Chief Eng	Sign & Date			

NOTE: Date & initial all entries

H:\fFORMS\Quality Assurance\approved QA\NCRWO RevE

Work Order ID 65727

Monday, January 24, 2011 1:37:22 PM

Item ID: D2724-042 **Accept** **Setup Start** **Stop**

Revision ID:

Item Name: 206L Step Assembly

Start Date: 1/24/2011 **Start Qty:** 2.00 **Cust Item ID:**

Required Date: 2/7/2011 **Req'd Qty:** 2.00 **Customer:**

Reference:

Approvals: **Process Plan:** _____ **Date:** _____ **Tooling:** _____ **Date:** _____ **Run Start** **Stop**

QC: _____ **Date:** _____ **SPC (Y/N):** _____ **Date:** _____

Sequence ID/ Work Center ID	Operation Description	Set Up/ Run Hours	Tool ID	Tool #	Plan Code	Accept Qty	Reject Qty	Reject Number	Insp. Stamp
210	QC3- Inspect Part Finish	0.00							
QC	Memo	0.00				2	ϕ	M	11/03/02
Quality Control									
220	Wing Walk as per dwg QSI005 4.4 Batch M116408	0.00							
HandFinish	Memo	0.00				2	6	M	11/03/02
Hand Finishing									
230	QC3- Inspect Part Finish	0.00							
QC	Memo	0.00							
Quality Control									

=7 M.L 11/03/02 (2X)

Dart Aerospace Ltd

W/O:		WORK ORDER CHANGES					
DATE	STEP	PROCEDURE CHANGE	By	Date	Qty	Approval Chief Eng / Prod Mgr	Approval QC Inspector

Part No: _____ **PAR #:** _____ **Fault Category:** _____ **NCR:** Yes No **DQA:** _____ **Date:** _____

Resolution: _____ **Disposition:** _____ **QA: N/C Closed:** _____ **Date:** _____

NCR:		WORK ORDER NON-CONFORMANCE (NCR)						
DATE	STEP	Description of NC Section A	Corrective Action Section B			Verification Section C	Approval Chief Eng	Approval QC Inspector
			Initial Chief Eng	Action Description Chief Eng	Sign & Date			

NOTE: Date & initial all entries

H:\fFORMS\Quality Assurance\approved QA\NCRWO RevE

Work Order ID 65727

Monday, January 24, 2011 1:37:22 PM

Item ID: D2724-042 **Accept** **Setup Start**

Revision ID: **Stop**

Item Name: 206L Step Assembly

Start Date: 1/24/2011 **Start Qty:** 2.00 **Cust Item ID:**

Required Date: 2/7/2011 **Req'd Qty:** 2.00 **Customer:**

Reference:

Run Start

Stop

Approvals: **Process Plan:** _____ **Date:** _____ **Tooling:** _____ **Date:** _____

QC: _____ **Date:** _____ **SPC (Y/N):** _____ **Date:** _____

Sequence ID/ Work Center ID	Operation Description	Set Up/ Run Hours	Tool ID	Tool #	Plan Code	Accept Qty	Reject Qty	Reject Number	Insp. Stamp
240	Identify as per dwg & Stock Location:_____	0.00	65725				11/3/3		
Packaging	**Memo**	0.00							
Packaging									
250	QC21- Final Inspection - Work Order Release	0.00					11/03/04		
QC	**Memo**	0.00							
Quality Control									

MF 11-03-03

Dart Aerospace Ltd

W/O:		WORK ORDER CHANGES					
DATE	STEP	PROCEDURE CHANGE	By	Date	Qty	Approval Chief Eng / Prod Mgr	Approval QC Inspector

Part No: _____ **PAR #:** _____ **Fault Category:** _____ **NCR:** Yes No **DQA:** _____ **Date:** _____

Resolution: _____ **Disposition:** _____ **QA: N/C Closed:** _____ **Date:** _____

NCR:		WORK ORDER NON-CONFORMANCE (NCR)						
DATE	STEP	Description of NC Section A	Corrective Action Section B			Verification Section C	Approval Chief Eng	Approval QC Inspector
			Initial Chief Eng	Action Description Chief Eng	Sign & Date			

NOTE: Date & initial all entries

H:\fFORMS\Quality Assurance\approved QA\NCRWO RevE

Picklist Print

Monday, January 24, 2011 1:37:31 PM

2

Work Order ID: 65727

Parent Item: D2724-042

Parent Item Name: 206L Step Assembly

Start Date: 1/24/2011 **Required Date:** 2/7/2011

Start Qty: 2.00 **Required Qty:** 2.00

Comments: IPP Rev:E As Per Ecn 766 06-01-06 JLM

Component Item ID/ Item Name	Replacement Item ID	Mfg/ Purch	Bin Item	Primary Location	Last Location	Route Seq ID	Unit of Measure	Qty on Hand	Qty per Kit	Total Qty	Qty Issued	Date Issued	Status
D2734		Manufactured	No			110	Each	45.0000	1	2	11·02·14		
Step End Plate													
				Location			**Loc Qty**		**Loc Code**				
				WA			45						
					62931		45			2			
D3458-1		Manufactured	No			110	Each	63.0000	2	4	11·02·14		
Step Mounting Plate													
				Location			**Loc Qty**		**Loc Code**				
				WA			63						
					51239		3						
					63075		60			4			
D3458-3		Manufactured	No			110	Each	66.0000	2	4	11·02·14		
Step Mounting Plate													
				Location			**Loc Qty**		**Loc Code**				
				WA			66						
					62683		16			4			
					63076		50						
D2734		Manufactured	No			160	Each	45.0000	1	2	11·02·26		
Step End Plate													
				Location			**Loc Qty**		**Loc Code**				
				WA			45						
					62931		45			2			

Dart Aerospace Ltd

W/O:		WORK ORDER CHANGES					
DATE	STEP	PROCEDURE CHANGE	By	Date	Qty	Approval Chief Eng / Prod Mgr	Approval QC Inspector

Part No: _____ **PAR #:** _____ **Fault Category:** _____ **NCR:** Yes No **DQA:** _____ **Date:** _____

Resolution: _____ **Disposition:** _____ **QA: N/C Closed:** _____ **Date:** _____

NCR:		WORK ORDER NON-CONFORMANCE (NCR)						
DATE	STEP	Description of NC Section A	Corrective Action Section B			Verification Section C	Approval Chief Eng	Approval QC Inspector
			Initial Chief Eng	Action Description Chief Eng	Sign & Date			

NOTE: Date & initial all entries

H:\fFORMS\Quality Assurance\approved QA\NCRWO RevE

Picklist Print

Monday, January 24, 2011 1:37:31 PM

Work Order ID: 65727

Parent Item: D2724-042

Parent Item Name: 206L Step Assembly

Start Date: 1/24/2011 **Required Date:** 2/7/2011

Start Qty: 2.00 **Required Qty:** 2.00

D2622-120C Step Extrusion	Manufactured	No	100	Each	131.7000	1	2	11.01.27

Location	Loc Qty	Loc Code	
WA	131.7		
55214	1.92		
58544	1		
61208	4.78		
~~64409~~	124		2

Dart Aerospace Ltd

W/O:		WORK ORDER CHANGES					
DATE	STEP	PROCEDURE CHANGE	By	Date	Qty	Approval Chief Eng / Prod Mgr	Approval QC Inspector

Part No: _____ **PAR #:** _____ **Fault Category:** _____ **NCR:** Yes No **DQA:** _____ **Date:** _____

Resolution: _____ **Disposition:** _____ **QA: N/C Closed:** _____ **Date:** _____

NCR:		WORK ORDER NON-CONFORMANCE (NCR)						
DATE	STEP	Description of NC Section A	Corrective Action Section B			Verification Section C	Approval Chief Eng	Approval QC Inspector
			Initial Chief Eng	Action Description Chief Eng	Sign & Date			

NOTE: Date & initial all entries

H:\fFORMS\Quality Assurance\approved QA\NCRWO RevE

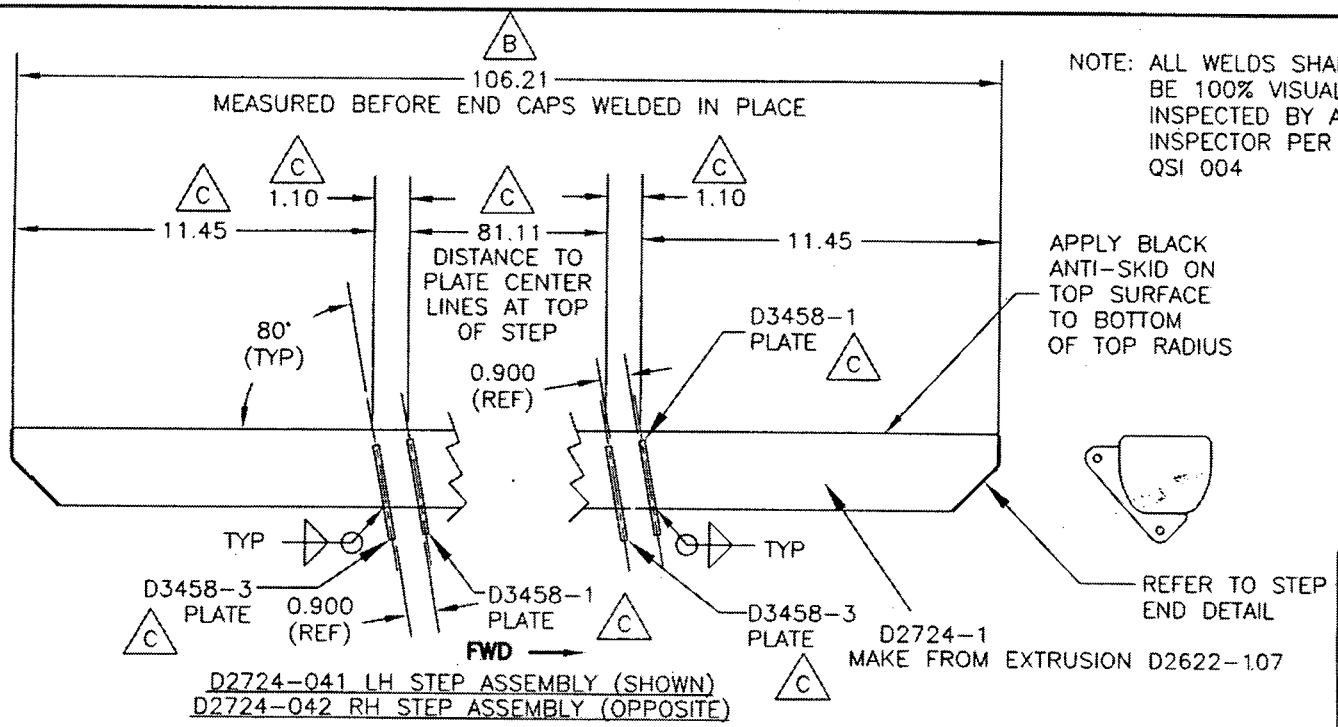

D2724-041 LH STEP ASSEMBLY (SHOWN)
D2724-042 RH STEP ASSEMBLY (OPPOSITE)

NOTE: ALL WELDS SHALL BE 100% VISUALLY INSPECTED BY A QUALIFIED INSPECTOR PER DART QSI 004

RELEASED 98.11.14

S[redacted]OPY
[redacted] TO
E[redacted]RING
UNCON[redacted]ED COPY
SUBJEC[redacted]ENDMENT
WIT[redacted]OTICE
WO[redacted]ORDER
NO. 65727
B 11-01-24

D2721-041/-042 STEP ASSEMBLY PARTS LIST

QTY -041	QTY -042	PART NUMBER	DESCRIPTION
X		D2724-041	LH STEP ASSEMBLY
	X	D2724-042	RH STEP ASSEMBLY
1	1	D2622-107	EXTRUSION
2	2	D2734	END PLATE
2	2	D3458-1	PLATE
2	2	D3458-3	PLATE

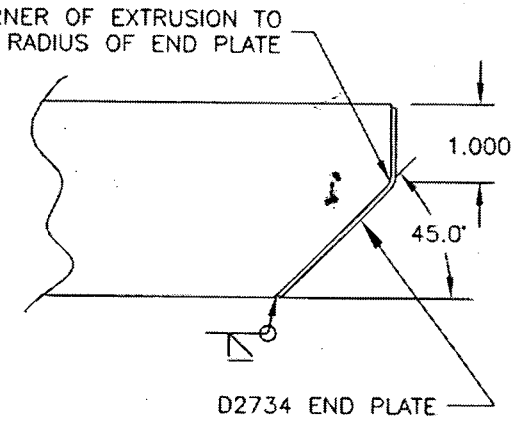

TYPICAL STEP END DETAIL
NOT TO SCALE
B

D2724-041/-042 STEP ASSEMBLY

1) MAKE FROM EXTRUSION D2622
2) WELD PER DART QSI 004
3) FINISH: CHEMICAL CONVERSION COAT PER DART QSI 005 4.1
   POWDER COAT ASSEMBLY WHITE (4.3.5.1) PER DART QSI 005 4.3
   APPLY BLACK ANTI-SKID PAINT PER DART QSI 005 4.4
4) ALL DIMENSIONS ARE IN INCHES
5) ALL TOLERANCES ARE PER DART QSI 018 UNLESS OTHERWISE NOTED

C	05.09.19	RE-DESIGN, ADD D3458-1/-3
B	98.10.19	UPDATED WELD DETAIL REVISED TOLERANCES
A	97.12.04	NEW ISSUE

DESIGN: KE
DRAWN BY: PH
CHECKED:
APPROVED:
DATE: 05.09.19
TITLE: 206L/407 STEP ASSEMBLY
DRAWING NO. D2724
REV. C
SHEET 1 OF 1
SCALE NTS

DART AEROSPACE USA, INC.
PORT HADLOCK, WA

Copyright © 2005 by DART AEROSPACE USA, INC.
THIS DOCUMENT IS PRIVATE AND CONFIDENTIAL AND IS SUPPLIED ON THE EXPRESS CONDITION THAT IT IS NOT TO BE USED FOR ANY PURPOSE OR COPIED OR COMMUNICATED TO ANY OTHER PERSON WITHOUT WRITTEN PERMISSION FROM DART AEROSPACE USA, INC.

Dart Aerospace Ltd

W/O:		WORK ORDER CHANGES					
DATE	STEP	PROCEDURE CHANGE	By	Date	Qty	Approval Chief Eng / Prod Mgr	Approval QC Inspector

Part No: _____ **PAR #:** _____ **Fault Category:** _____ **NCR:** Yes No **DQA:** _____ **Date:** _____

Resolution: _____ **Disposition:** _____ **QA: N/C Closed:** _____ **Date:** _____

NCR:		WORK ORDER NON-CONFORMANCE (NCR)						
DATE	STEP	Description of NC Section A	Corrective Action Section B			Verification Section C	Approval Chief Eng	Approval QC Inspector
			Initial Chief Eng	Action Description Chief Eng	Sign & Date			

NOTE: Date & initial all entries

H:\fFORMS\Quality Assurance\approved QA\NCRWO RevE